DocuSign Envelope ID: 683A808E-0B0B-4CC7-833E-E2247A5302C8

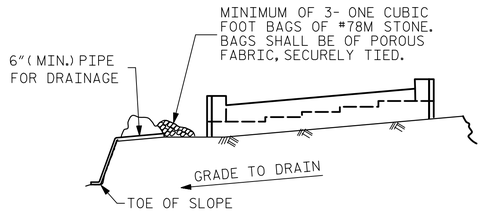

BAGGED STONE AND PIPE SHALL BE PLACED IMMEDIATELY AFTER COMPLETION OF END BENT EXCAVATION. PIPE MAY BE EITHER CONCRETE, CORRUGATED STEEL, CORRUGATED ALUMINUM ALLOY, OR CORRUGATED PLASTIC. PERFORATED PIPE WILL NOT BE ALLOWED.

BAGGED STONE SHALL REMAIN IN PLACE UNTIL THE ENGINEER DIRECTS THAT IT BE REMOVED. THE CONTRACTOR SHALL REMOVE AND DISPOSE OF SILT ACCUMULATIONS AT BAGGED STONE WHEN SO DIRECTED BY THE ENGINEER. BAGS SHALL BE REMOVED AND REPLACED WHENEVER THE ENGINEER DETERMINES THAT THEY HAVE DETERIORATED AND LOST THEIR EFFECTIVENESS.

NO SEPARATE PAYMENT WILL BE MADE FOR THIS WORK AND THE ENTIRE COST OF THIS WORK SHALL BE INCLUDED IN THE UNIT CONTRACT PRICE BID FOR THE SEVERAL PAY ITEMS.

TEMPORARY DRAINAGE AT END BENT

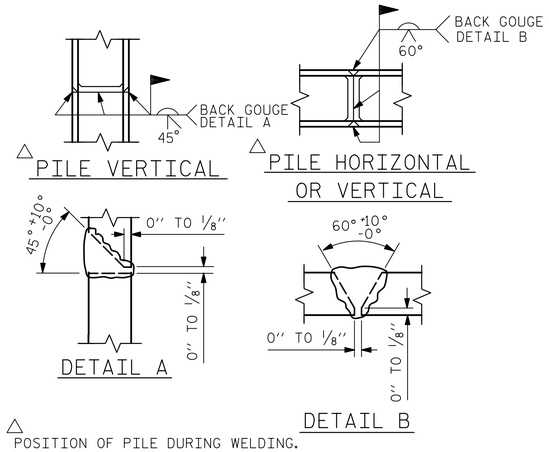

△ POSITION OF PILE DURING WELDING.

PILE SPLICE DETAILS

BAR TYPES

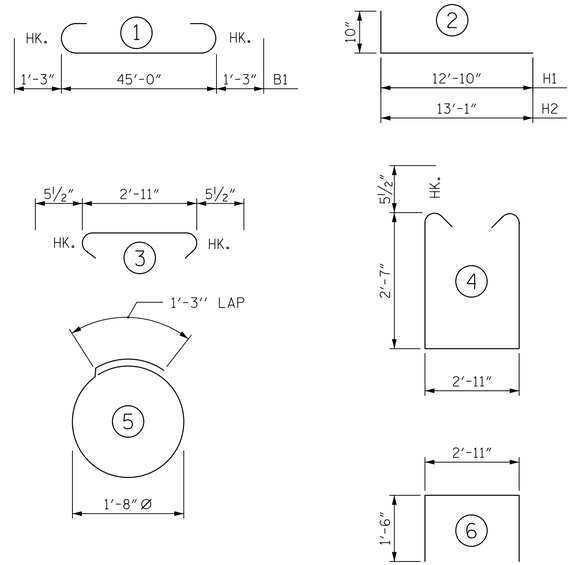

ALL BAR DIMENSIONS ARE OUT TO OUT

BILL OF MATERIAL

END BENT 2

BAR	NO.	SIZE	TYPE	LENGTH	WEIGHT
B1	12	9	1	47'-6"	1938
B2	6	4	STR	13'-4"	53
B3	6	4	STR	20'-5"	82
B4	8	5	STR	45'-0"	375
B5	8	4	STR	23'-9"	127
B6	12	4	STR	2'-11"	23
H1	16	5	2	13'-8"	228
H2	18	5	2	13'-11"	261
S1	46	5	3	3'-10"	184
S2	46	5	4	11'-0"	528
S3	24	4	5	6'-6"	104
U1	21	4	6	5'-11"	83
V1	68	4	STR	6'-6"	295
V2	20	4	STR	8'-8"	116
V3	20	4	STR	9'-8"	129
REINFORCING STEEL					4,526 LBS.

CLASS A CONCRETE BREAKDOWN

POUR #1	CAP, COLLAR, & LOWER PART OF WINGS	28.0 C.Y.
TOTAL CLASS A CONCRETE		28.0 C.Y.

HP 12 X 53 STEEL PILES
No: 6 LIN. FT.= 135

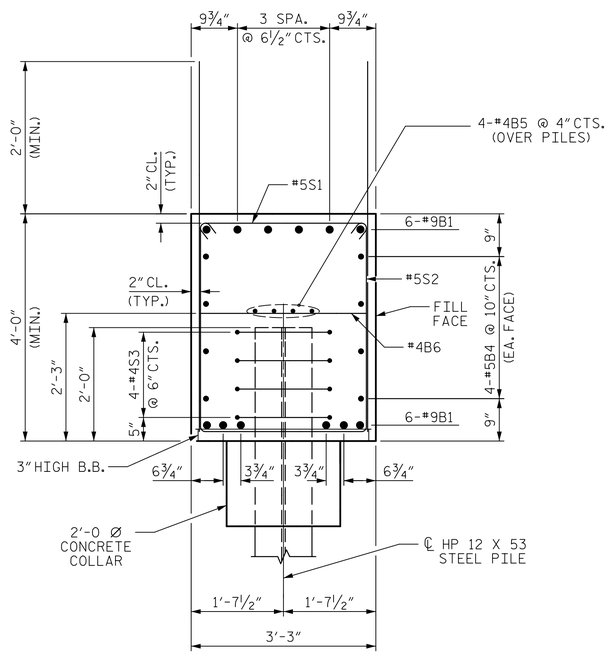

SECTION A-A

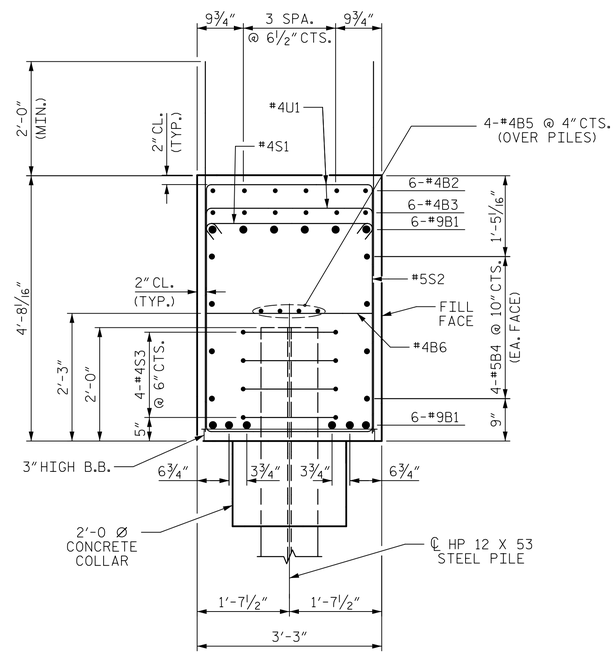

SECTION B-B

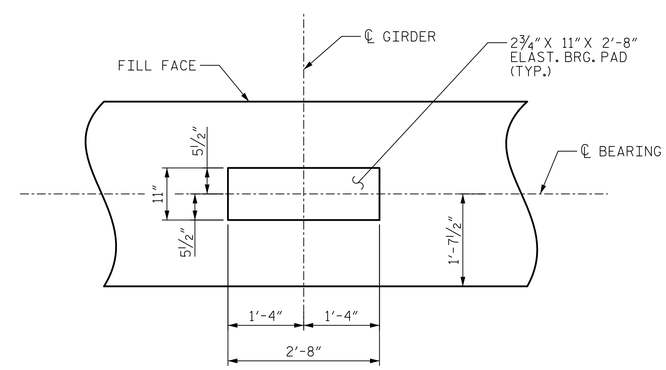

DETAIL "A"

PROJECT NO. B-4974

STANLY/MONTGOMERY COUNTY

STATION: 339+86.39 -L-

SHEET 3 OF 3

AECOM
AECOM TECHNICAL SERVICES, INC.
701 CORPORATE CENTER DRIVE, SUITE 475
RALEIGH, NC 27607
(919) 854-6200 www.aecom.com
AECOM License No. F-0342

NORTH CAROLINA PROFESSIONAL SEAL 035062 ENGINEER JOHN E. SLOAN
Digitally signed by
DocuSigned by:
8/30/2018

STATE OF NORTH CAROLINA
DEPARTMENT OF TRANSPORTATION
RALEIGH

SUBSTRUCTURE

INTEGRAL END BENT 2

REVISIONS							SHEET NO.
NO.	BY:	DATE:	NO.	BY:	DATE:		S-93
1			3				TOTAL SHEETS
2			4				148

DRAWN BY : T.B. STUMP DATE : 1/2018
CHECKED BY : M. TOM DATE : 2/2018
DESIGNED BY : K. DONALD DATE : 2/2018
DESIGN CHECKED BY : M. TOM DATE : 2/2018

DOCUMENT NOT CONSIDERED FINAL UNLESS ALL SIGNATURES COMPLETED

DATE: 8/28/2018
TIME: 2:40:32 PM

USER: matt.tom
DGN: \\USPAL-Typ00\uscaecomnet.com\Data\Projects\60536253\900_Work\90_CADD_WCDOT_TIP\Structures\04 Drawings\40_187_B4974_SM0_EBB.dgn